Early Water Samplers: Sea-Bird Scientific's Novel 1993 Design

Engineering and Design History Behind the SBE 32 and SBE 55 Water Sampelrs

April 2020

Creating Serial Number 0001

As told by Dave Walter, Principal Mechanical Engineer and Designer of the SBE 32

In the spring of 1993, then-president of Sea-Bird Electronics Ken Lawson came to my desk and said, "I have good news and bad news. The good news is that I have just taken the first order for a Sea-Bird water sampler and you get to design it! The bad news is that I have committed to a delivery date six months from today". This started a mini Manhattan project for me as I was the only M.E. on staff at the time and this would be the biggest mechanical project that Sea-Bird had undertaken to date.

At the time, the only commercially available oceanographic water sampler used a sweeping arm to trigger all the bottles. Because of this design approach, a failure of the arm would render the entire system useless. This was a big reason why we chose individual solenoid-based triggers for each bottle: we could sustain failures of individual solenoids and still maintain some operability. Furthermore, The mechanical parts in the latch assembly are mass balanced. This approach was taken to eliminate the possibility of an unintended triggering of a bottle as the result of a crash against the side of the ship or the ship's deck during deployment.

Because of the proliferation of the original design in the field and the interest from customers for a solution to its known failures, Sea-Bird chose to make the SBE Carousel trigger design compatible with existing frames. This limited the maximum diameter of the trigger head and posed a significant challenge to the design.

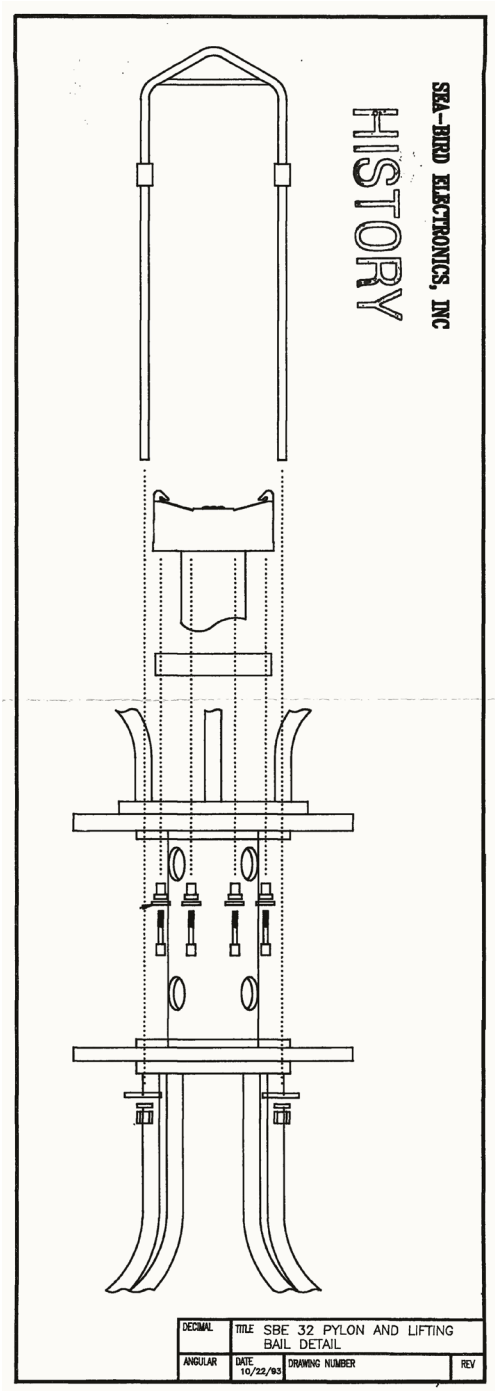

On the mechanical side, we built a single trigger/solenoid assembly for testing. This led to a single iteration of the mechanism and then we were on to the final packaging. The first prototype was finished only a few hours before it was scheduled to ship. Our production manager and I finished hand painting the first unit just before midnight, and then returned in the morning to pack and ship it for a trade show in Vancouver CA. The next two years were filled with design work filling out most of the product line we build today.

Lost at Sea: The First 36-place, Full Ocean Depth Carousel

In 1994, Sea-Bird was approached to design and build the first 36-place Carousel/CTD system to deploy in the Mariana trench. This unit would be the centerpiece research tool for a newly commissioned research vessel. This ship was to be state of the art and would use a unique tapered titanium sea cable for reaching the deepest point on the planet. The cable is tapered to reduce the amount of tension in the cable when it is fully deployed - if not for this taper, the cable would break under its own weight at full deployment. The CTD and the trigger assembly were made out of titanium on a stainless steel frame to withstand the high pressures that would be seen at the bottom of the trench. This was an extremely expensive, one-of-a-kind system.

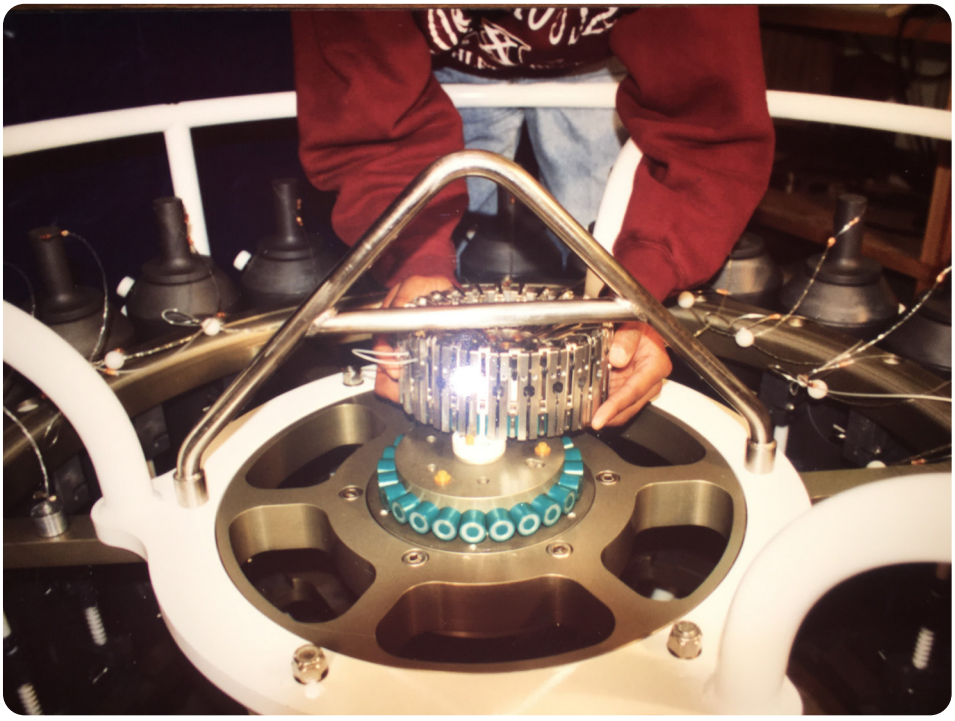

One of the first large 24 bottle systems. These early units had epoxy painted magnet bodies and the stainless steel triggers. These details were upgraded in later iterations of the SBE 32 based on feedback from the field.

Soon after delivery, the scientists loaded the 36-place carousel on their research vessel and set out for a test deployment. The carousel was lifted from the deck and deployed overboard to a shallow depth to test the triggering of all the bottles. Once this test was complete, the system was to be lifted back onto the ship to have the bottles drained and then be re-deployed for a test profile of the CTD function. As the fully loaded system was being raised out of the water to be brought back onto the ship, the ultra-expensive tapered sea cable failed. The carousel became detached from the cable and the first full ocean depth carousel/CTD system was sent on a one-way trip to the bottom.

Not long after this system was lost we got a purchase order for a replacement. The one caveat that came with the order was that we make the next unit a little lighter.

Magnetically Actuated Triggers

Today, Sea-Bird Scientific offers two water sampler models: the SBE 32 that retains most of Dave's original 1993 design and the compact SBE 55. These samplers are designed to be integrated with Sea-Bird Scientific CTDs and Auto-Fire Modules. Both the SBE 32 and SBE 55 use solenoid-based triggers to fire bottles in a specific order:

1. The water sampler pulls power from the sea-cable/AFM/CTD.
2. It charges the capacitor that activates an electromagnet.
3. The water sampler's microprocessor receives a command to fire a bottle.
4. The water sampler powers an electromagnet, which sends a magnetic pulse that disengages the trigger's locking mechanism.
5. The trigger releases. Tension from surgical tubing inside of the bottle pulls both ends closed, capturing water.
6. Circuitry inside of the pylon senses electrical current flowing through the electromagnet. It sends a confirmation message to the CTD.
7. The process repeats for each sample bottle, each with a unique electromagnet.

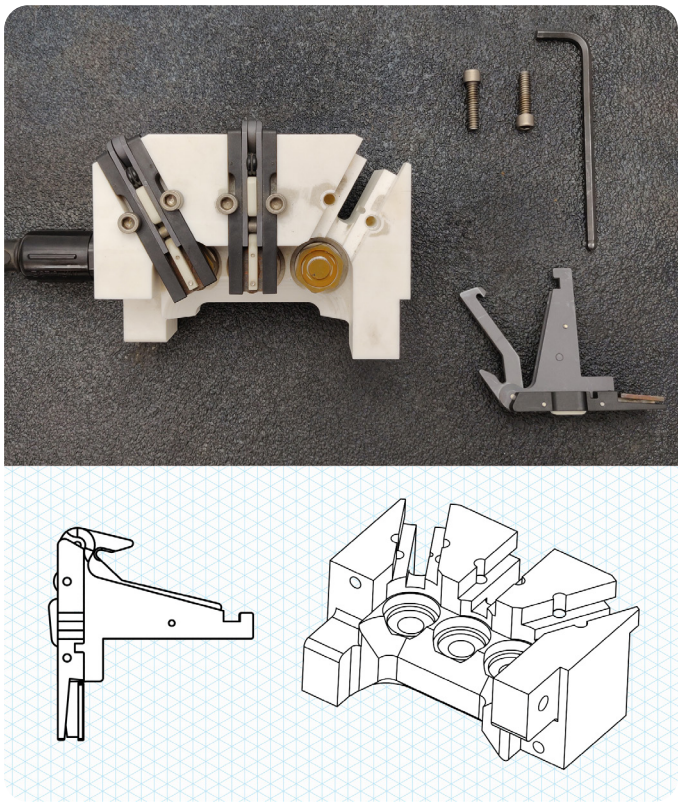

The latch arrray on the SBE 55. This uses the same solenoid and magnetic trigger design as the SBE 32, housed in a compact 3-bottle package.

The heart of every Sea-Bird Scientific water sampler is the magnetically actuated lanyard release. With a pressure-proof electromagnet at each bottle position, the SBS water samplers have greater operational redundancy: failure of the mechanical latch or electromagnet only affects a single bottle, and bottles can be fired in any order with an electrical pulse. Conceptually, SBS water samplers can be broken into two distinct components:

- **Electrical controls**: known as the "pylon" in the SBE 32 and the "Electronics Control Module" in the SBE 55. These contain the electronics that handle power, interface with the CTD, and activate the electromagnet.
- **Mechanical latches**: known as the "latch head" on the SBE 32 and "latch array" on the SBE 55. These are the magnetic latches that hold the tension from the bottle's lanyard. When engaged by the electromagnet, these latches release their locking mechanism, allowing tension on the lanyard to close the bottle. All of the mechanical action takes place in the magnetic latch, and each latch is easily swapped with a replacement.

Compared to the risk of a failing mechanical arm, this redundancy allows scientists to successfully collect more samples across a greater range of depths.